NOZZLE CHART	
NOZZLE ID	NPT SIZE
N1	1/2
N2	3/4
N3	1 1/2
N4	2
N5	3

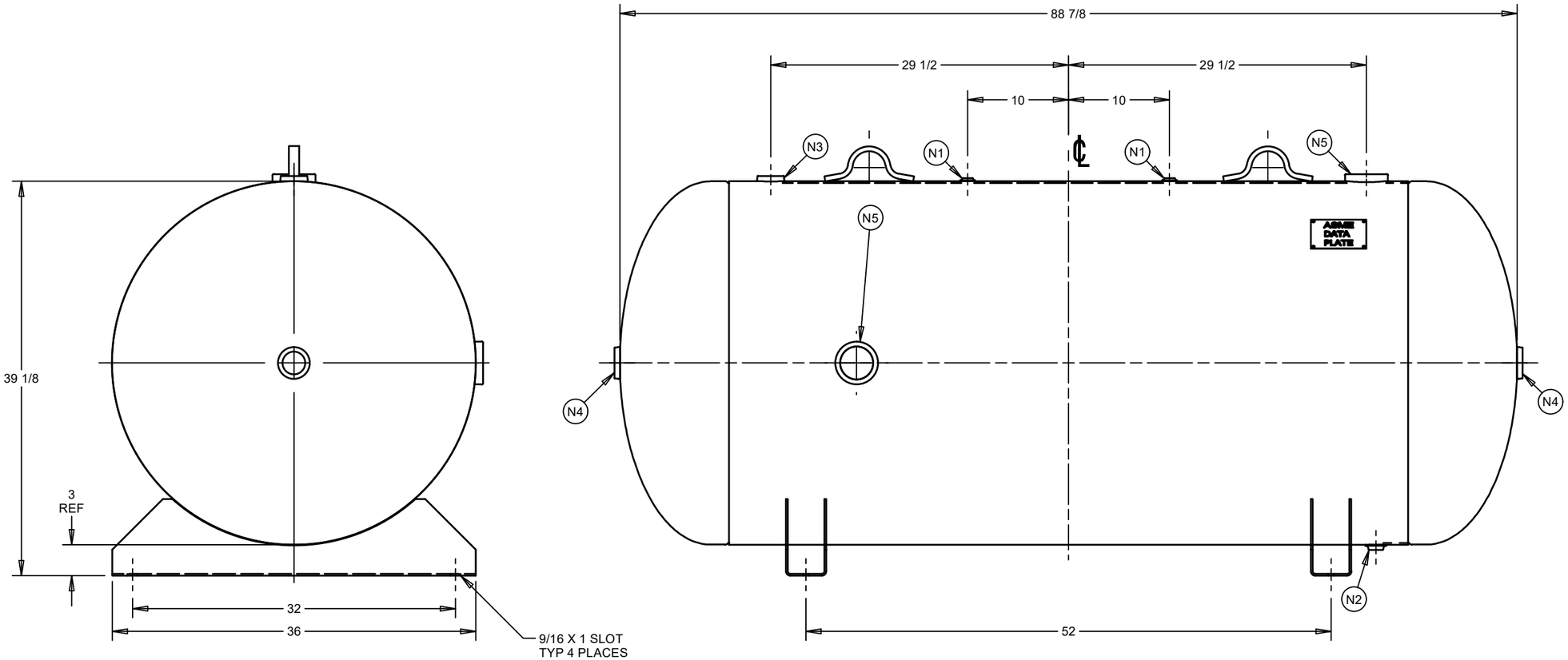

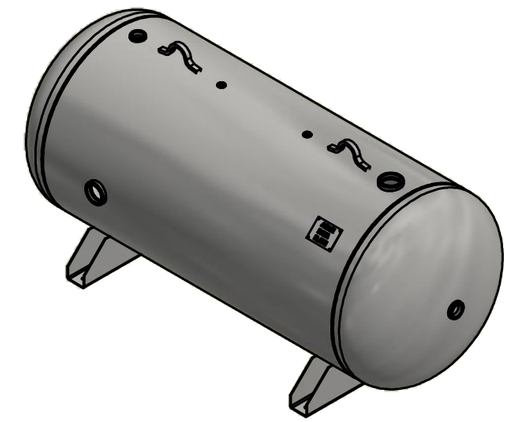

DESIGN INFORMATION	
SPECIFICATION	VALUE
DIAMETER O.D./I.D.	36 O.D.
MAWP	165 PSI AT 400°F
MDMT	-20°F AT 165 PSI
CAPACITY	APPROX 358 GALLONS
SHIPPING WEIGHT	696 LBS
CRN	L4039.5C

(BUILT IN ACCORDANCE WITH LATEST EDITION OF SECTION VIII DIV 1 ASME CODE)

THIS DRAWING & SPECIFICATIONS ARE PROPERTY OF SPVG AND MAY NOT BE COPIED, REPRODUCED, OR USED IN WHOLE OR PART, AS A BASIS FOR DESIGN MANUFACTURE OR SALE WITHOUT PRIOR PERMISSION FROM SPVG.

REV	DESCRIPTION	BY	DATE
D15	ISSUED		

TITLE: HORIZONTAL AIR RECEIVER

CUSTOMER: STOCK

TYPE: ASME

SAMUEL 1865 PRESSURE VESSEL GROUP

DRAWN	CHECKED	DRAWING NO	REV
KAT 9/20/2016	DMM 10/14/2016	A10346	D15

SIZE: B

SHEET 1 OF 1